| REVISIONS | | | | | | |
|---|---|---|---|---|---|---|
| ZONE | LTR | DESCRIPTION | CHANGE No | DATE | BY | APPR'D |
| | A | RELEASED FOR QUOTE | DR27519 | 20JUL10 | RMB | DJC |
| | B | RELEASED FOR PRODUCTION | 73104 | 06AUG10 | RMB | DJC |
| | C | ADD FLEX SLEEVE TO VIEWS | 73531 | 28FEB11 | RMB | BLM |

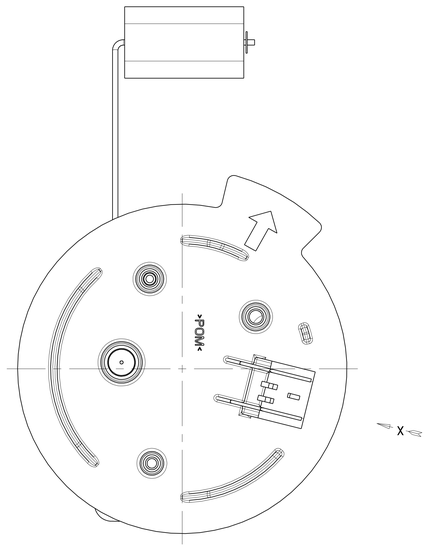


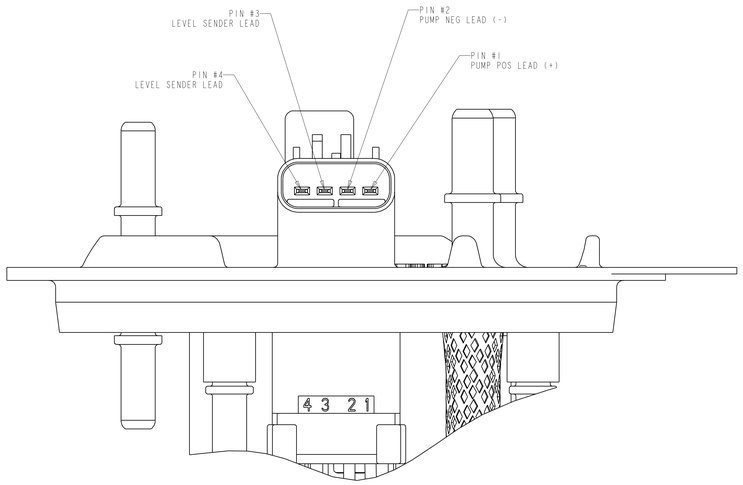


E-CONNECTOR PIN OUT DETAIL
PARTIAL VIEW IN DIRECTION OF ARROW "X"
SCALE 2:1

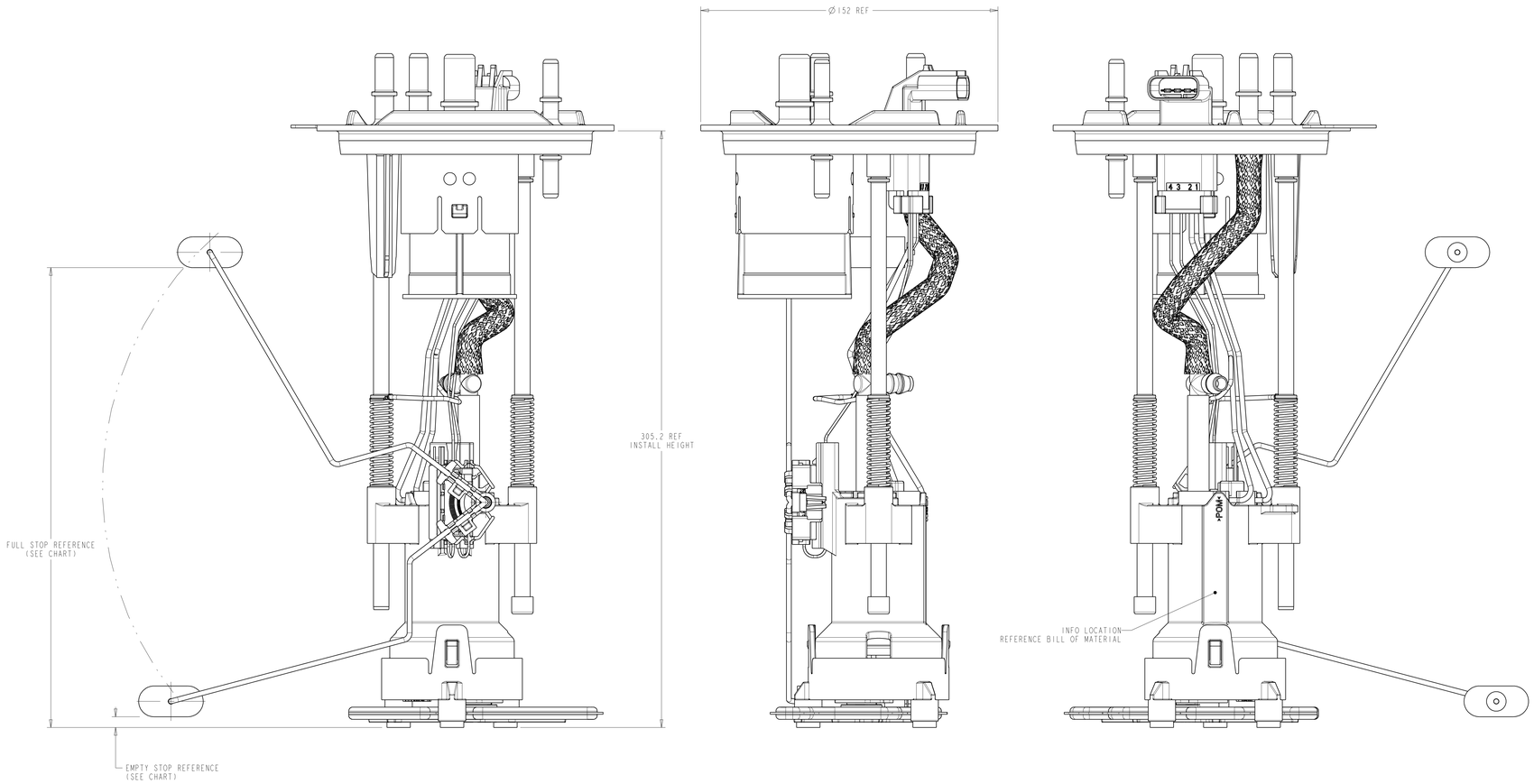


| LEVEL SENDER UNIT HEIGHT VS RESISTANCE | | |
|---|---|---|
| FLOAT POSITION | HEIGHT (mm) | RESISTANCE (Ohms) |
| FULL STOP | 235.0 REF | 138.6 ± 4 |
| EMPTY STOP | 5.0 REF | 7.4 ± 2 |

NOTES:

1. SPECIAL CUSTOMER PACKAGING REQUIREMENTS MAY CALL FOR THE ADDITION OF SPECIFIC LABELS NOT SHOWN ON THIS DRAWING.
2. MODULE TO BE PACKAGED USING COMPONENTS NOTED ON BOM SO THAT CONTAMINATION FROM FOREIGN MATERIAL IS PREVENTED:
   - PLUG PROTECTORS ON PORTS
   - POLY BAG
3. SHOWN WIRE ROUTING MAY DIFFER FROM FINISHED PRODUCT.


TI AUTOMOTIVE CONFIDENTIAL AND PROPRIETARY
THIS DRAWING IS PROPERTY OF TI AUTOMOTIVE. TI AUTOMOTIVE CLAIMS PROPRIETARY RIGHTS IN THE SUBJECT MATTER SHOWN AND DESCRIBED ON THIS DRAWING AND RETAINS ALL INTELLECTUAL PROPERTY RIGHTS. THE DRAWING IS PROVIDED FOR REFERENCE PURPOSES ONLY AND ON THE EXPRESS CONDITION THAT IT SHALL NOT BE DISCLOSED TO THIRD PARTIES OR REPRODUCED, DISTRIBUTED OR USED FOR THE PURPOSE OF MANUFACTURE BY OR PROCUREMENT FROM OTHERS OF THE ARTICLE OR PART SHOWN WITHOUT TI AUTOMOTIVE'S EXPRESS WRITTEN CONSENT. NO LICENSE OR OTHER RIGHTS IS GRANTED BY THE DISCLOSURE OF INFORMATION ON THIS DRAWING TO RECIPIENT.
COPYRIGHT, TI AUTOMOTIVE 2010. ALL RIGHTS RESERVED.


METRIC
ALL DIMENSIONS ARE IN MILLIMETERS

DO NOT SCALE
DECIMAL TOLERANCES UNLESS OTHERWISE SPECIFIED
ONE PLACE ±0.25 TWO PLACE ±0.13 ANGLES ±1°

THIRD ANGLE PROJECTION

DIMENSIONS IN ACCORDANCE WITH ASME Y14.5 - 2009


TI Automotive
630 COLUMBIA ST.
CARO, MI 48723
+1 989.673.7727


| | | | |
|---|---|---|---|
| ENGINEER | D.CATLIN | 09JUN10 | MATERIAL/SPECIFICATION: N/A |
| DES.MANAGER | | | |
| DESIGNER | R.BRUBAKER | 03FEB10 | |
| CAD SYSTEM: PRO/E | SCALE: 1:1 | | SHEET NO. 1 OF 1 |
| REFERENCE (SIZE/REV.): CAD: AR0027669/AC | | | PLM REFERENCE/REV.: 000104113/AA |
| REFERENCE (SIZE/REV.): | | | PLM REFERENCE/REV.: |

DRAWING NAME: FUEL MODULE OUTLINE (F150FFV,M-TANK)

SIZE: A0 DRAWING NO./REV.: TU276